Problem of the Day

2015.Jun.16

Problem of the Day

Two of three dissolved-air flotation thickeners (DAFTs) at the plant are in service. Each measures 25 feet wide, 65 feet long, with an average depth of 12.5 feet. To maintain the target SRT, the waste activated sludge (WAS) flow to the DAFTs is set at 1,425 gpm today. The average solids concentration in the WAS is 5,200 mg/L and the float averages 3.2%. Calculate the solids loading rate to these thickening units in pounds per hour per square foot (lb TSS/hr·ft^2).

Introduction

Solids loading rate to DAFTs is almost always in lb TSS/**hr**·ft^2. I say "almost always" because some engineers will work with the units lb TSS/**d**·ft^2, typically used with other thickening processes, when designing and evaluating DAFTs. At least in California, though, certification exams will require operators to calculate the solids loading rate to DAFTs in lb TSS/hr·ft^2. Even if a certification exam problem does not specifically instruct examinees to do so, the State will want operators to know that the solids loading rate to DAFTs is always expressed in lb TSS/hr·ft^2. **Per hour**, don't forget.

Take note of the wording in this problem:

> "The average solids concentration in the WAS is 5,200 mg/L and the float averages 3.2%."

Part of the angst that operators have with math problems, I believe, is because we, as a profession, are so inconsistent—or, maybe, just lackadaisical—in our descriptions, especially when it comes to "solids." I'm not quite sure how to guide you on this, but I think the following statement will be true 99% of the time:

> No matter what is being referenced—solids, suspended solids, total suspended solids—unless specifically identified, if concentration is given in mg/L, it means mg TSS/L, and if it is given in %, it means %TS.

Operators must fully understand the difference between the many "solids" we talk about in wastewater treatment. For example here, you need to understand the difference between total suspended solids (TSS) and total solids (TS). This is a discussion for another day. WWTT uses the following graphic to explain all the various solids in wastewater treatment. All operators need to be able to walk through this graphic and explain each different "solid" and how it is measured. Note, for clarification, when you see reference to "settleable solids" in other documents, they are the same as TSS_{set} in this graphic.

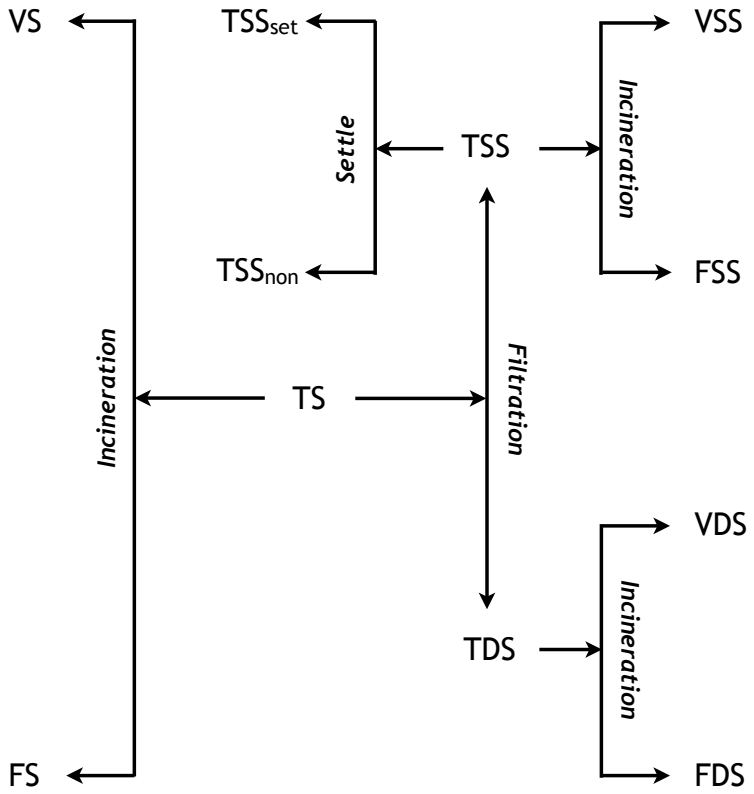

*Solids of interest in wastewater treatment: Total Solids (**TS**), Volatile Solids (**VS**), Fixed Solids (**FS**), Total Suspended Solids (**TSS**), Volatile Suspended Solids (**VSS**), Fixed Suspended Solids (**FSS**), Settleable TSS (**TSS_{set}**), Non-settleable TSS (**TSS_{non}**), Total Dissolved Solids (**TDS**), Volatile Dissolved Solids (**VDS**), and Fixed Dissolved Solids (**FDS**); **Incineration** at 550°C, **Filtration** through 1.2-um filter, **Settle** for 30 minutes.*

Solution

The question specifically asks to calculate the solids loading rate to the DAFTs and express it in units of lb TSS/hr·ft^2. These units are entered between heavy vertical lines, as always, followed by an equals sign and the blank solution bridge.

Problem of the Day: Two of three dissolved-air flotation thickeners (DAFTs) at the plant are in service. Each measures 25 feet wide, 65 feet long, with an average depth of 12.5 feet. To maintain the target SRT, the waste activated sludge (WAS) flow to the DAFTs is set at 1,425 gpm today. The average solids concentration in the WAS is 5,200 mg/L and the float averages 3.2%. Calculate the solids loading rate to these thickening units in pounds per hour per square foot (lb TSS/hr·ft^2).

$$\left| \frac{\text{lb TSS}}{\text{hr·ft}^2} \right| = \underline{\qquad\qquad\qquad\qquad\qquad\qquad\qquad\qquad}$$

The following list summarizes the information given in the problem statement expressed in appropriate units:

1. 2 DAFTs, 25 ft x 65 ft x 12.5 ft (depth not used)
2. WAS flow = 1,425 gal/min
3. WAS solids concentration = 5,200 mg TSS/L
4. Float solids concentration = 3.2% TS = 3.2 lb TS/100 lb TWAS (not used)

The units lb TSS needed in the numerator of the answer suggest a “pounds” equation. In this case, it will be a pounds-per-hour calculation. WWTT prefers to start the solution bridge for these calculations with the concentration of whatever we’re calculating pounds of; in this case, TSS. This unit is needed in the answer so is shown in bold on both sides of the equals sign.

$$\left| \frac{\text{lb } \mathbf{TSS}}{\text{hr·ft}^2} \right| = \left| \frac{5{,}200 \text{ mg } \mathbf{TSS}}{\text{L}} \right| \underline{\qquad\qquad\qquad\qquad\qquad\qquad\qquad\qquad}$$

Whenever the units mg/L are entered on the solution bridge, WWTT cancels them.

$$\left| \frac{\text{lb } \mathbf{TSS}}{\text{hr·ft}^2} \right| = \left| \frac{5{,}200 \cancel{\text{mg}} \mathbf{TSS}}{\cancel{\text{L}}} \right| \left| \frac{\cancel{\text{L}}}{\text{M·}\cancel{\text{mg}}} \right| \underline{\qquad\qquad\qquad\qquad\qquad\qquad\qquad\qquad}$$

The M in M·mg reminds us we need an Mgal to cancel the Ms. But the WAS flow is given in gal/min. So we first enter the conversion factor to cancel the Ms.

$$\left| \frac{\text{lb } \mathbf{TSS}}{\text{hr·ft}^2} \right| = \left| \frac{5{,}200 \cancel{\text{mg}} \mathbf{TSS}}{\cancel{\text{L}}} \right| \left| \frac{\cancel{\text{L}}}{\cancel{\text{M·mg}}} \right| \left| \frac{\cancel{\text{M}}\text{gal}}{10^6 \text{ gal}} \right| \underline{\qquad\qquad\qquad\qquad\qquad\qquad\qquad\qquad}$$

Before we cancel gal (although we could), we enter the WAS flow rate so gal cancel and we now have a unit of time in the denominator (min) that will eventually be converted to the hr needed in the answer.

$$\left| \frac{\text{lb } \mathbf{TSS}}{\text{hr·ft}^2} \right| = \left| \frac{5{,}200 \cancel{\text{mg}} \mathbf{TSS}}{\cancel{\text{L}}} \right| \left| \frac{\cancel{\text{L}}}{\cancel{\text{M·mg}}} \right| \left| \frac{\cancel{\text{M}}\text{gal}}{10^6 \cancel{\text{gal}}} \right| \left| \frac{1{,}425 \cancel{\text{gal}}}{\text{min}} \right| \underline{\qquad\qquad\qquad\qquad\qquad\qquad\qquad\qquad}$$

We still have another gal to cancel and we need lb in the numerator of the answer. We accomplish both by entering the density of water (you should recognize this solution bridge to this point as a standard "pounds" calculation).

lb TSS	=	5,200 ~~mg~~ **TSS**	~~L~~	~~Mgal~~	1,425 ~~gal~~	8.34 **lb**		
hr·ft^2		~~L~~	~~M·mg~~	10^6 ~~gal~~	min	~~gal~~		

In order to get ft^2 needed in the denominator of the answer, the surface area of one DAFT is entered in the denominator of the solution bridge. Surface area for a rectangular tank is width times length. Note the depth of the DAFTs is never used in answering this question. Also, this is the surface area per DAFT as shown.

lb TSS	=	5,200 ~~mg~~ **TSS**	~~L~~	~~Mgal~~	1,425 ~~gal~~	8.34 **lb**	DAFT		
hr·**ft^2**		~~L~~	~~M·mg~~	10^6 ~~gal~~	min	~~gal~~	25 **ft**	65 **ft**	

We're almost there. How many DAFTs are there? Notice "2 DAFT" is entered so the DAFTs cancel, numerator and denominator. You won't make mistakes if you let the units tell you what to do.

lb TSS	=	5,200 ~~mg~~ **TSS**	~~L~~	~~Mgal~~	1,425 ~~gal~~	8.34 **lb**	~~DAFT~~			
hr·**ft^2**		~~L~~	~~M·mg~~	10^6 ~~gal~~	min	~~gal~~	25 **ft**	65 **ft**	2 ~~DAFT~~	

The only step remaining is converting min in the denominator to hr needed in the answer. With the necessary conversion factor, all the units have canceled except those needed in the answer, so we know the solution bridge is complete. The arithmetic gives the answer.

lb TSS	=	5,200 ~~mg~~ **TSS**	~~L~~	~~Mgal~~	1,425 ~~gal~~	8.34 **lb**	~~DAFT~~			60 ~~min~~
hr·ft^2		~~L~~	~~M·mg~~	10^6 ~~gal~~	~~min~~	~~gal~~	25 **ft**	65 **ft**	2 ~~DAFT~~	**hr**

Problem of the Day: Two of three dissolved-air flotation thickeners (DAFTs) at the plant are in service. Each measures 25 feet wide, 65 feet long, with an average depth of 12.5 feet. To maintain the target SRT, the waste activated sludge (WAS) flow to the DAFTs is set at 1,425 gpm today. The average solids concentration in the WAS is 5,200 mg/L and the float averages 3.2%. Calculate the solids loading rate to these thickening units in pounds per hour per square foot (lb TSS/hr·ft^2).

lb TSS	=	5,200 ~~mg~~ **TSS**	~~L~~	~~Mgal~~	1,425 ~~gal~~	8.34 **lb**	~~DAFT~~			60 ~~min~~
hr·ft^2		~~L~~	~~M·mg~~	10^6 ~~gal~~	~~min~~	~~gal~~	25 **ft**	65 **ft**	2 ~~DAFT~~	**hr**

5,200 x 1,425 x 8.34 x 60 ÷ 1,000,000 ÷ 25 ÷ 65 ÷ 2 = **<u>1.14 lb TSS/hr·ft^2</u>**.

Discussion

If you can remember the units on solids loading rate to DAFTs, lb TSS/hr·ft^2, it is easy to remember the range that is typical in municipal wastewater treatment practice:

1 to 2 lb TSS/hr·ft^2

Obviously, the answer is in this range so we have confidence it is correct.

Happy calculating! Let us know, by leaving a comment, if you want us to do a specific problem, if you see a mistake, or if you have a question on any of the Problems of the Day you are looking at.

18030 Brookhurst Street, PMB 573 · Fountain Valley, California 92708 · 866-773-WWTT ·
www.wastewatertechnologytrainers.com