# Problem of the Day
# 2014.Oct.25

## Discussion

**Three important points** were made in the 2014.Oct.16 Problem of the Day:

1. We make the assumption, always, that the VSS removal efficiency in primary clarifiers equals the TSS removal efficiency (but **never** the BOD or $TSS_{set}$ removal efficiencies).
2. On account of this assumption, the percent volatile solids in the influent remains the same in the primary effluent and in the primary sludge.
3. VSS and particulate BOD both measure the same material but, because the two tests are conducted completely differently, they will not be numerically equal.

**The different solids of interest in wastewater treatment are a source of confusion for many operators**. WWTT uses the figure below to try to sort out this confusion. There will be more discussion of this figure in future Problems of the Day.

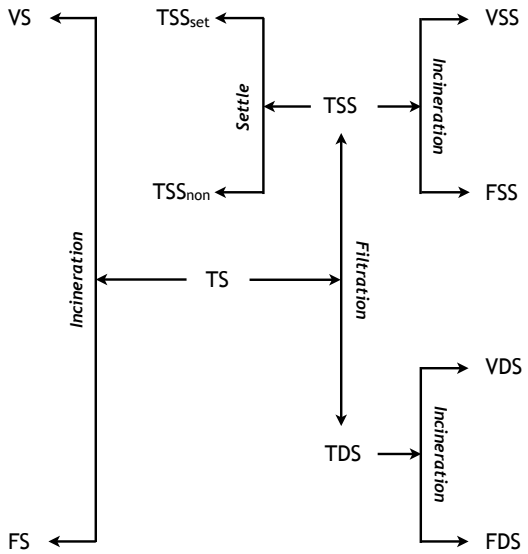


*Solids of interest in wastewater treatment: Total Solids (**TS**), Volatile Solids (**VS**), Fixed Solids (**FS**), Total Suspended Solids (**TSS**), Volatile Suspended Solids (**VSS**), Fixed Suspended Solids (**FSS**), Settleable TSS (**$TSS_{set}$**), Non-settleable TSS (**$TSS_{non}$**), Total Dissolved Solids (**TDS**), Volatile Dissolved Solids (**VDS**), and Fixed Dissolved Solids (**FDS**); **Incineration** at 550°C, **Filtration** through 1.2-um filter, **Settle** for 30 minutes.*

## Problem

Today's problem looks at another important assumption made in primary sludge problems.

**Problem of the Day**: The flow to the Muddy River WWTP is 16 MGD. The influent TSS concentration averages 325 mg TSS/L. The influent VSS concentration averages 239 mg VSS/L.The TSS removal efficiency across the plant's primary clarifiers is 57.5%. Calculate the pounds of VS per day fed to the digesters in the primary sludge.

## Solution

As discussed, the process objective of primary clarifiers is to remove settleable TSS ($TSS_{set}$). From the graphic on the previous page, it is evident that all $TSS_{set}$ are TSS but not all TSS are settleable because some are some TSS that are non settleable ($TSS_{non}$)

The information given in the problem statement is summarized here in the units used by WWTT:

- Influent flow = 16 Mgal/d
- $TSS_{INF}$ = 325 mg TSS/L
- $VSS_{INF}$ = 239 mg VSS/L
- TSS removal efficiency = 57.5% = 0.575

The problem specifically asks for "lb VS/d" removed so we put these units between heavy vertical lines followed by an equals sign and the blank track.

**Problem of the Day**: The flow to the Muddy River WWTP is 16 MGD. The influent TSS concentration averages 325 mg TSS/L. The influent VSS concentration averages 239 mg VSS/L.The TSS removal efficiency across the plant's primary clarifiers is 57.5%. Calculate the pounds of VS per day fed to the digesters in the primary sludge.

$$\left| \frac{\text{lb VS}}{\text{d}} \right| = \underline{\qquad\qquad\qquad\qquad\qquad\qquad\qquad\qquad}$$

This is a straight pounds-per-day calculation. WWTT likes to start out the railroad track on pounds-per-day calculations with concentration. Unfortunately, we don't have the units, mg VS/L, in the list above, only mg VSS/L. As it turns out, we make another paired assumption when we do "sludge" problems and that is TS = TSS and VS = VSS. From the figure on the previous page, however, this is clearly not true because TSS = TSS + TDS. While it is a little harder to see in the figure, it also is true that VS = VSS + VDS. Still, assuming TS = TSS and VS = VSS allows us to do these problems with a reasonable degree of accuracy. What WWTT does in these kinds of situations is, for example, to put the second "S" in parentheses, TS(S) and VS(S), to indicate that we're "allowed" to assume TS = TSS and VS = VSS, but we know it is not true. Does that make sense?

With that discussion, the railroad track is started with the influent VSS concentration, as shown. Starting the railroad track in this manner enters the unit, **VS**(S), in the railroad track needed in the answer, indicated in **bold**. The second S in parentheses was explained above.

**Problem of the Day**: The flow to the Muddy River WWTP is 16 MGD. The influent TSS concentration averages 325 mg TSS/L. The influent VSS concentration averages 239 mg VSS/L.The TSS removal efficiency across the plant's primary clarifiers is 57.5%. Calculate the pounds of VS per day fed to the digesters in the primary sludge.

$$\left| \frac{\text{lb } \mathbf{VS}}{\text{d}} \right| = \left| \frac{\text{239 mg } \mathbf{VS}\text{(S)}}{\text{L}} \right| \underline{\qquad\qquad\qquad\qquad\qquad\qquad\qquad\qquad}$$

The 239 mg VS(S)/L just entered into the railroad track is the raw, influent concentration. In order to compensate for how many mg/L are removed in the primary clarifiers, the TSS removal efficiency, expressed as a decimal (0.575 in this problem), is entered because, as indicated above, the VSS removal efficiency is always take to equal the TSS removal efficiency.

**Problem of the Day**: The flow to the Muddy River WWTP is 16 MGD. The influent TSS concentration averages 325 mg TSS/L. The influent VSS concentration averages 239 mg VSS/L.The TSS removal efficiency across the plant's primary clarifiers is 57.5%. Calculate the pounds of VS per day fed to the digesters in the primary sludge.

| | | | | |
|---|---|---|---|---|
| lb **VS** | = | 239 mg **VS**(S) | 0.575 | |
| d | | L | | |

Next, as done multiple times before, when the units, mg/L, are entered into the railroad track, they are immediately canceled with L/M·mg.

**Problem of the Day**: The flow to the Muddy River WWTP is 16 MGD. The influent TSS concentration averages 325 mg TSS/L. The influent VSS concentration averages 239 mg VSS/L.The TSS removal efficiency across the plant's primary clarifiers is 57.5%. Calculate the pounds of VS per day fed to the digesters in the primary sludge.

| | | | | | |
|---|---|---|---|---|---|
| lb **VS** | = | 239 ~~mg~~ **VS**(S) | 0.575 | ~~L~~ | |
| d | | ~~L~~ | | M·~~mg~~ | |

The "M" in the denominator reminds us that we need "Mgal" in the numerator to cancel the Ms. Therefore, flow is entered next. This also puts d in the railroad track needed in the answer as indicated in **bold**.

**Problem of the Day**: The flow to the Muddy River WWTP is 16 MGD. The influent TSS concentration averages 325 mg TSS/L. The influent VSS concentration averages 239 mg VSS/L.The TSS removal efficiency across the plant's primary clarifiers is 57.5%. Calculate the pounds of VS per day fed to the digesters in the primary sludge.

| | | | | | | |
|---|---|---|---|---|---|---|
| lb **VS** | = | 239 ~~mg~~ **VS**(S) | 0.575 | ~~L~~ | 16 ~~M~~gal | |
| **d** | | ~~L~~ | | ~~M·mg~~ | **d** | |

Finally, gal needs to be converted to lb using the density of water, which is entered next.

**Problem of the Day**: The flow to the Muddy River WWTP is 16 MGD. The influent TSS concentration averages 325 mg TSS/L. The influent VSS concentration averages 239 mg VSS/L.The TSS removal efficiency across the plant's primary clarifiers is 57.5%. Calculate the pounds of VS per day fed to the digesters in the primary sludge.

| | | | | | | |
|---|---|---|---|---|---|---|
| **lb VS** | = | 239 ~~mg~~ **VS**(S) | 0.575 | ~~L~~ | 16 ~~Mgal~~ | 8.34 **lb** |
| **d** | | ~~L~~ | | ~~M·mg~~ | **d** | ~~gal~~ |

The only units remaining are those needed in the answer, **lb VS**(S)**/d**, so the math is done. The arithmetic completes the problem:

239 x 0.575 x 16 x 8.34 = **18,338 lb VS**(S)**/d**.

Let's us know, via a comment, if you have any problems you'd like us to solve here. Happy computing!